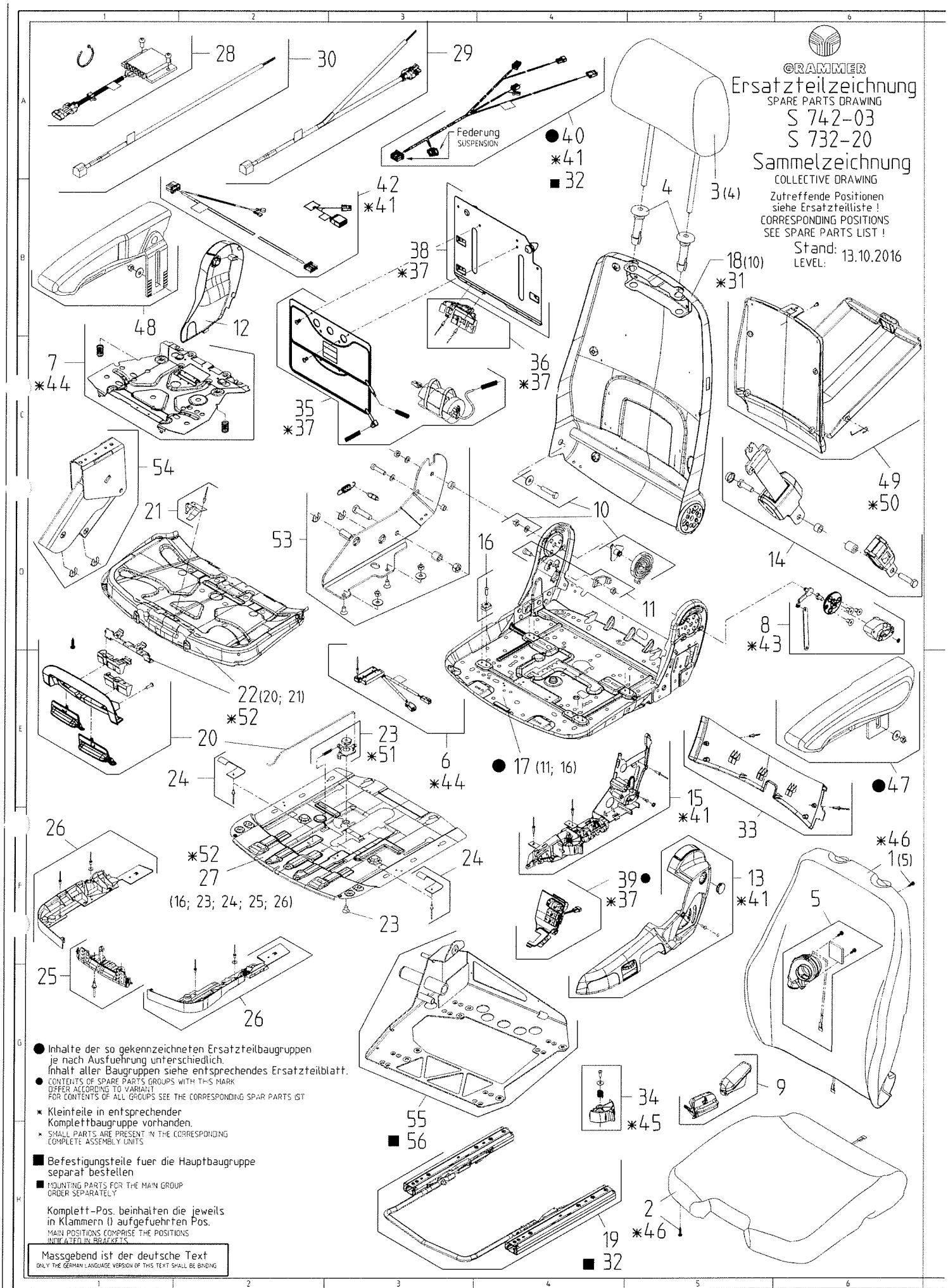
GRAMMER
Ersatzteilzeichnung
SPARE PARTS DRAWING
S 742-03
S 732-20
Sammelzeichnung
COLLECTIVE DRAWING
Zutreffende Positionen siehe Ersatzteilliste !
CORRESPONDING POSITIONS SEE SPARE PARTS LIST !
Stand: LEVEL: 13.10.2016
28
30
29
Federung
SUSPENSION
●40
*41
■ 32
42
*41
4
3(4)
38
*37
18(10)
*31
48
12
36
*37
7
*44
35
*37
54
21
53
10
16
49
*50
14
11
8
*43
22(20; 21)
*52
20
23
*51
6
*44
● 17 (11; 16)
●47
24
15
*41
33
26
*52
27
(16; 23; 24; 25; 26)
24
23
39●
*37
13
*41
*46
1(5)
5
25
26
55
■ 56
34
*45
9
19
■ 32
2
*46
● Inhalte der so gekennzeichneten Ersatzteilbaugruppen je nach Ausfuehrung unterschiedlich. Inhalt aller Baugruppen siehe entsprechendes Ersatzteilblatt.
● CONTENTS OF SPARE PARTS GROUPS WITH THIS MARK DIFFER ACCORDING TO VARIANT. FOR CONTENTS OF ALL GROUPS SEE THE CORRESPONDING SPAR PARTS IST
* Kleinteile in entsprechender Komplettbaugruppe vorhanden.
* SMALL PARTS ARE PRESENT IN THE CORRESPONDING COMPLETE ASSEMBLY UNITS
■ Befestigungsteile fuer die Hauptbaugruppe separat bestellen
■ MOUNTING PARTS FOR THE MAIN GROUP ORDER SEPARATELY
Komplett-Pos. beinhalten die jeweils in Klammern () aufgefuehrten Pos.
MAIN POSITIONS COMPRISE THE POSITIONS INDICATED IN BRACKETS.
Massgebend ist der deutsche Text
ONLY THE GERMAN LANGUAGE VERSION OF THIS TEXT SHALL BE BINDING

Partslist S742-03/1294588 SPARE PARTS LIST FOR SEAT TOP
Cust.Mat-No.

Drawing-No: MSG95EL-03

Pos	Id.-No.	Description	Qty.	Werkstoff Norm	Cu-Mat.-No.
1	1295452	POLSTER F.R_STOFF_HZ	1		
2	1281297	SEAT CUSHION COMPL.	1		
3	1288973	HEADREST EXTENSION C	1		
4	1117033	GUIDING F.HEADREST C	1	/	
5	1099276	FAN FOR ACTIVE CLIMA	1		
6	1178533	SEAT SWITCH (OPS) CP	1		
7	1158829	COMPENSATOR F. SEAT	1		
8	1098127	BACKREST ANGLE ADJUS	1		
9	1099285	HANDLE F. SWIVEL/HA/	1		
10	1091158	BACKREST BEARING KIT	1		
11	1136863	END STOP F. BACKREST	1		
12	1298859	COVER RS.CPL.	1	/	
13	1165749	COVER	1		
14	1137391	SEAT BELT	1		
15	1099277	SUPPORT FOR HANDLE C	1		
16	1091214	GUIDING F. SDA. CPL.	1		
17	1178691	SEAT PAN COMPL.	1		
18	1184729	RUECKEN KPL.	1		
19	1137152	ADJUSTMENT SLIDE BAT	1		
20	1136685	TRIGGERING F.SDA./SA	1		
21	139257	LEAF SPRING CPL.	1	/	
22	1099282	SEAT ANGLE ADJUSTMEN	1		
23	139246	LEVER F.SWIVEL/SDA.C	1	/	
24	1091428	LEAF SPRING CPL.	1		
25	139254	BRACKET F.SDA./SAA.C	1	/	
26	139521	COVER F.SDA./SAA.CPL	1	/	
27	1099281	SEAT DEPTH ADJUSTMEN	1		
30	1144120	ADAPTER CABLE CPL.12	1	/	
31	1136045	SMALL PARTS BACKREST	1		
32	1184788	MOUNTING PARTS F.ADJ	1	/	
33	1098126	COVER COMPL.	1		
34	1099284	HANDLE FOR SHOCK ABS	1		
35	1255932	BLISTER F.LVS.CPL.	1		
36	1261940	DISTRIBUTOR CLIMATE	1		
37	1158788	SMALL PARTS AIR LUMB	1		
38	140974	PLATE F. LUMBAR SUPP	1		
39	1158776	TRIGGER F.LUMBAR SUP	1		
40	1158843	WIRING HARNESS CPL.	1		
41	1136918	SMALL PARTS LH COVER	1		
42	1158844	WIRING HARNESS CPL.	1		
43	1136013	SMALL PARTS BACKREST	1		
44	1136318	SMALL PARTS SEAT SWI	1		
45	1137064	SMALL PARTS HANDLE	1		
46	1135136	SCREW Kit	1		
47	1281194	ARMREST COMPL.LH.	2		
48	1281195	ARMREST COMPL.RH.	2		
49	142259	DOCUMENT BOX CPL	1		

Partslist S742-03/1294588 SPARE PARTS LIST FOR SEAT TOP
Cust.Mat-No.

Drawing-No: MSG95EL-03

Pos	Id.-No.	Description	Qty.	Werkstoff Norm	Cu-Mat.-No.
50	1173358	SMALL PARTS LITERATU	1	/ /	
51	1137273	SMALL PARTS SDA/SWIV	1		
52	1136790	SMALL PARTS SEAT DEP	1		

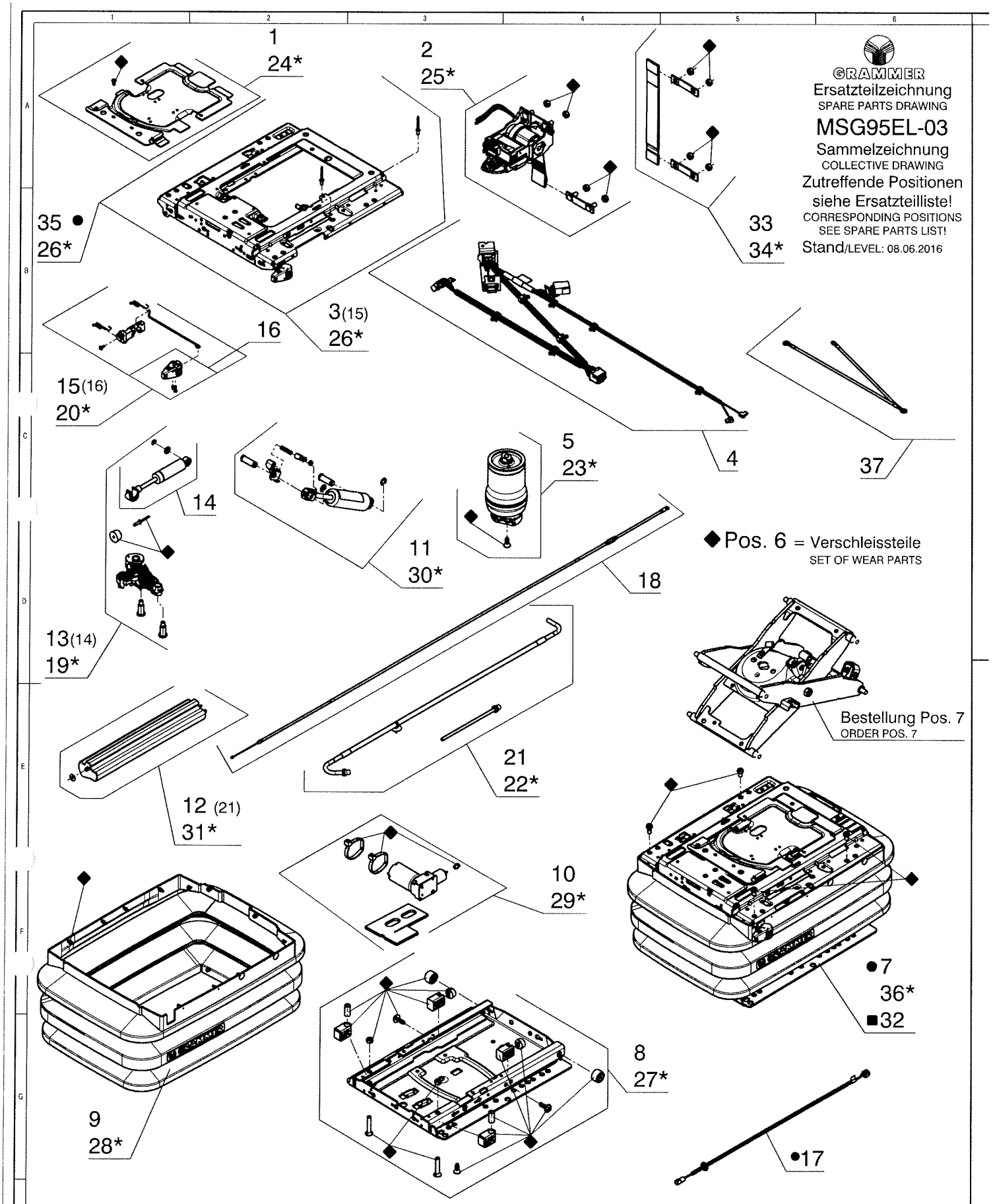

GRAMMER

Ersatzteilzeichnung
SPARE PARTS DRAWING

MSG95EL-03

Sammelzeichnung
COLLECTIVE DRAWING

Zutreffende Positionen siehe Ersatzteilliste!
CORRESPONDING POSITIONS SEE SPARE PARTS LIST!

Stand/LEVEL: 08.06.2016

Partslist MSG95EL-03/1294588 SPARE PARTS LIST FOR SUSPENSION
Cust.Mat-No.

Drawing-No: MSG95EL-03

Pos	Id.-No.	Description	Qty.	Werkstoff Norm	Cu-Mat.-No.
1	1137237	COVER CPL.	1	/ / /	
2	1254167	LEVEL CONTROL CPL.	1		
4	1252739	WIRING HARNESS CPL.	1		
5	1137352	AIR SPRING CPL.	1	/	
6	1270148	SET OF WEAR PARTS	1		
7	1255881	SUSPENSION MSG95EL 2	1		
8	1273240	SUSPENSION LOWER PAR	1		
9	1110418	BELLOWS CPL.	1	/ /	
10	1146520	COMPRESSOR 24V CPL.	1	/ / /	
11	1157732	SHOCK ABSORBER CPL.M	1	/ /	
12	1364635	ADDED AIR RESERVOIR	1	/	
13	1137800	FAI.CPL.	1	/ / /	
14	1138841	SHOCK ABSORBER CPL.F	1	/ / /	
18	1158177	BOWDEN CABLE F.DA.CP	1	/ /	
19	1138850	SMALL PARTS FAI.	1	/ / /	
21	1138903	INNER TUBE CPL.	1	/ -	
22	1138910	SMALL PARTS INNER TU	1	/ / /	
23	1134834	SMALL PARTS AIR SPRI	1	/ / /	
24	1134577	SMALL PARTS COVER	1	/ / /	
25	1137970	SMALL PARTS LEVEL CO	1	/ / /	
26	1138018	SMALL PARTS SUSPENSI	1	/ / /	
27	1269903	SMALL PARTS SUSPENSI	1		
28	126120	MOUNTING PARTS F.BEL	1		
29	1232679	SMALL PARTS COMPRESS	1		
30	1157733	SMALL PARTS SHOCK AB	1	/ /	
31	1270154	SMALL PARTS ADDED AI	1		
32	1141352	FIXING PARTS	1		
33	1137279	BELT LOOP SEWN CPL.	1	/ / /	
34	1138874	SMALL PARTS SECONDAR	1	/ / /	
35	1184465	SUSPENSION UPPER PAR	1	/ / /	
36	1223782	SMALL PARTS SUSPENSI	1		